SURFACE CEILING DOWNLIGHT - SDOWN

Item code 86.OC02.2321.03



SDOWN

Item code	**86.OC02.2321.03**
Product type	**Outdoor**
Category	**Surface Ceiling Downlight**
Family	**SDOWN**
Pictograms	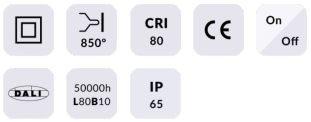

Dimensions	
Product dimensions (mm)	**Ø95X152 mm**

Scheme

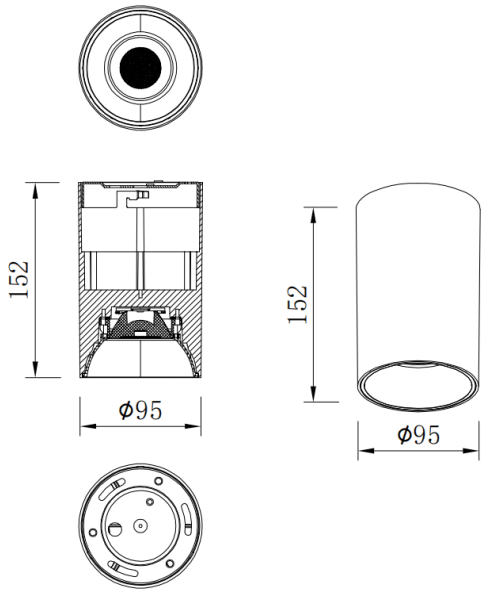

Product	
Real power (W)	**20**
Real luminous flux (Lm)	**1600**
Luminous efficiency (Lm/W)	**80**
Beam angle (º)	**40**
Life time (h)	**50000h L80B10**
IP	**IP65**
Control gear	**ON-OFF**
Colour temperature (K)	**3000**
Colour consistency (SDCM)	**SDCM3**
CRI	**80**

Photometry

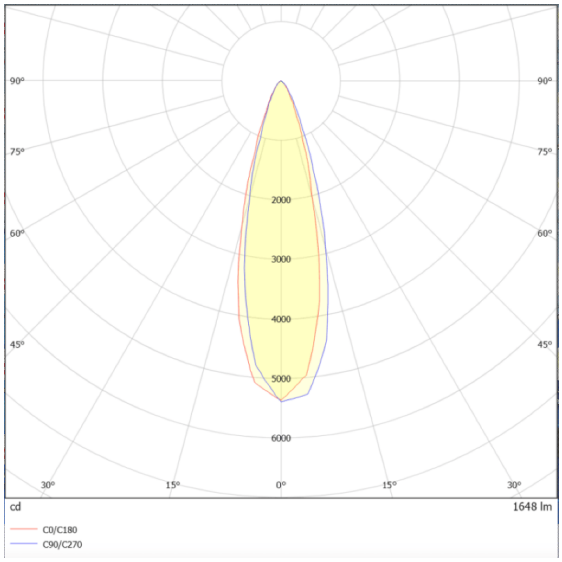
90°
90°
75°
75°
2000
60°
60°
3000
4000
45°
45°
5000
6000
30°
15°
0°
15°
30°
cd
1648 lm
C0/C180
C90/C270